ERSATZTEILLISTE
OKIFAX OF-7

SPARE PARTS LIST
OKIFAX OF-7

M-OSD-10049-10

ZEICHNUNG 1 - CABINET ASSY (FIGURE 1 - CABINET ASSY)

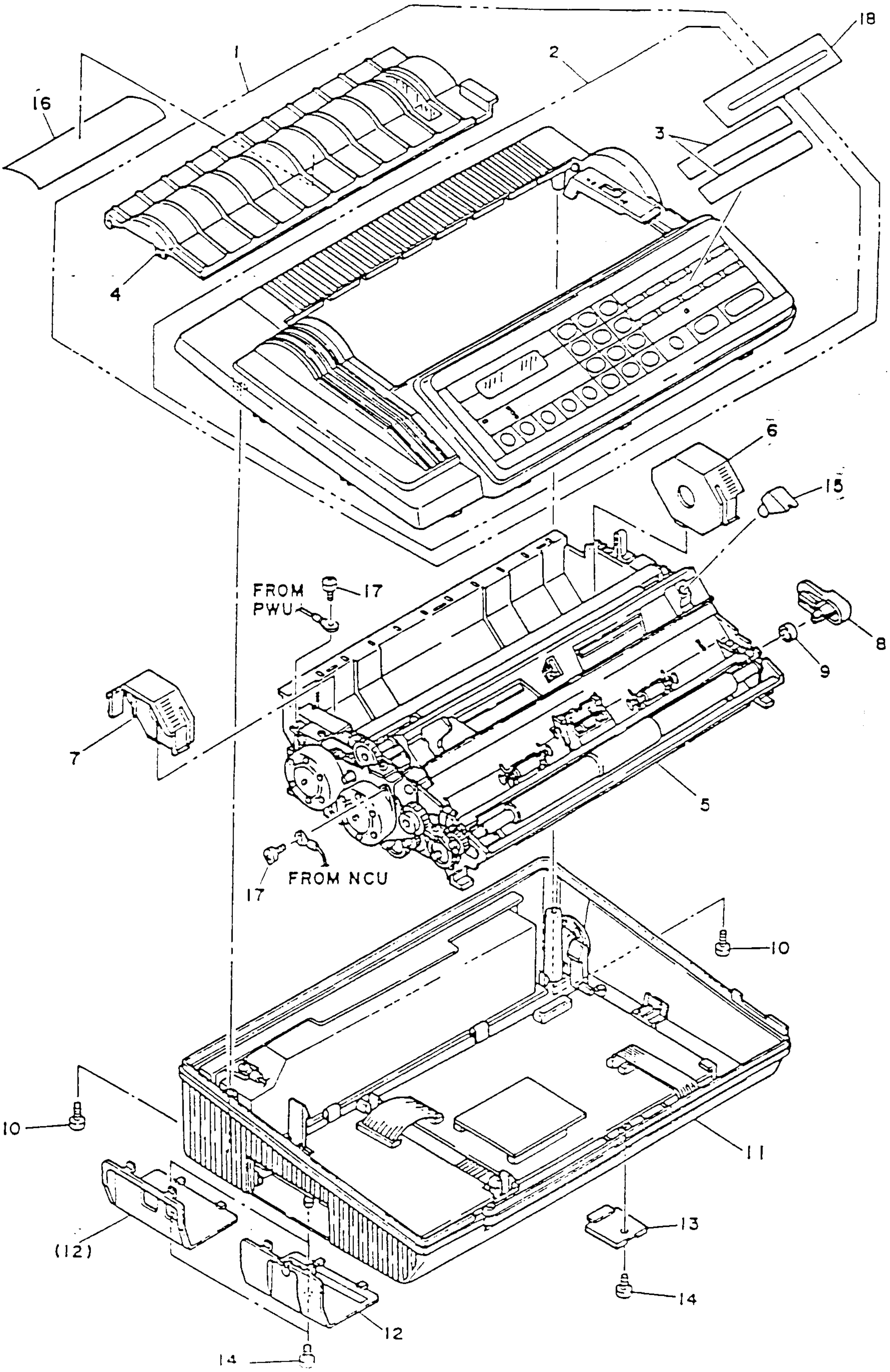

LISTE 1 - CABINET ASSY (TABLE 1 - CABINET ASSY)

NR. NO.	BEZEICHNUNG PART NAME	BESTELL-NR. PART NO	BEMERKUNG REMARK
1	UPPER COVER ASSY (ENTHÄLT NR. 2-4, 18)	4YB3526-1049G1	
3	ONE TOUCH REFERENCE LABEL	4PP3526-3195P3	
4	PAPER COVER ASSY	4YB3526-1088G4	
5	MAIN FRAME ASSY	1PA3526-3031G3	
6	PAPER SIZE SPACER (A)	3PP3526-3034P1	
7	PAPER SIZE SPACER (B)	3PP3526-3035P1	
8	RELEASE SCAN UNIT LEVER	3PP3526-3026P1	
9	RELEASE SCAN UNIT SPACER	4PB3526-3137P1	
12	TERMINAL COVER ASSY	3PA3526-3207G1	
15	DOCUMENT GUIDE CAP, R	3PP3526-3144P1	
16	PAPER LOAD DECAL	3PP3526-3108P1	
17	SCREW	+BTD3-6-IOF	
18	ONE TOUCH REFERENCE COVER,TN	4PP3526-3143P1	TN

ZEICHNUNG 2 - LOWER COVER ASSY (FIGURE 2 - LOWER COVER ASSY)

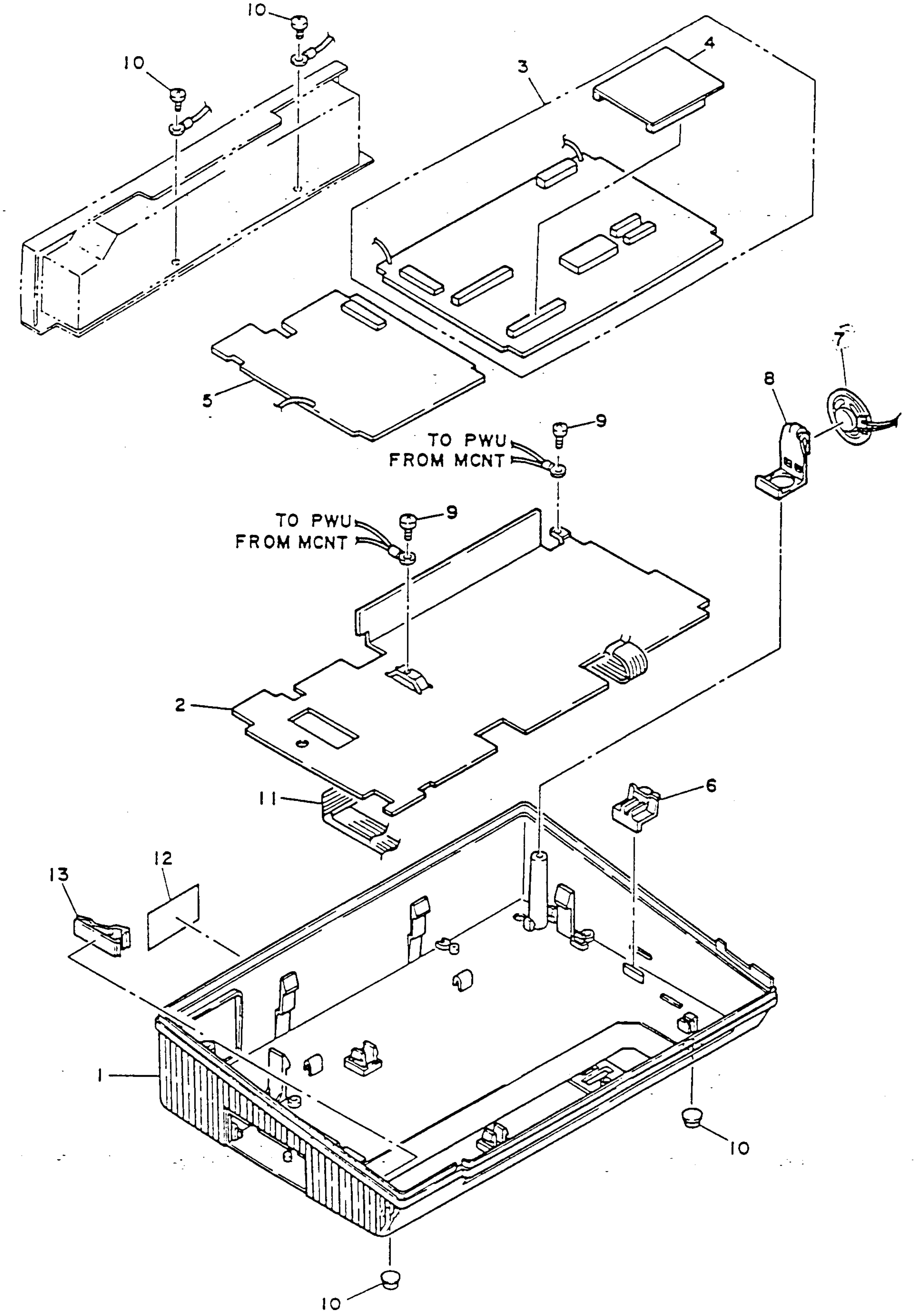

LISTE 2 - LOWER COVER ASSY (TABLE 2 - LOWER COVER ASSY)

NR. NO.	BEZEICHNUNG PART NAME	BESTELL-NR. PART NO
3	P.W.A. (MCNT-16)	4YU3526-1031G8
4	P.W.A. (MODEM)	4YB3526-1053G1
5	P.W.A. (NCU-16C), INT’L	4YU3526-1033G11
	P.W.A. (NCU-16C), NW	4YU3526-1033G3
	P.W.A. (NCU-16C), GER	4YU3526-1033G8
6	VOLUME CONTROL LEVER	3PP3526-3134P1
7	SPEAKER	4YB3526-1028G1

ZEICHNUNG 3 - MAIN FRAME ASSY (1/2) (FIGURE 3 - MAIN FRAME ASSY, 1/2)

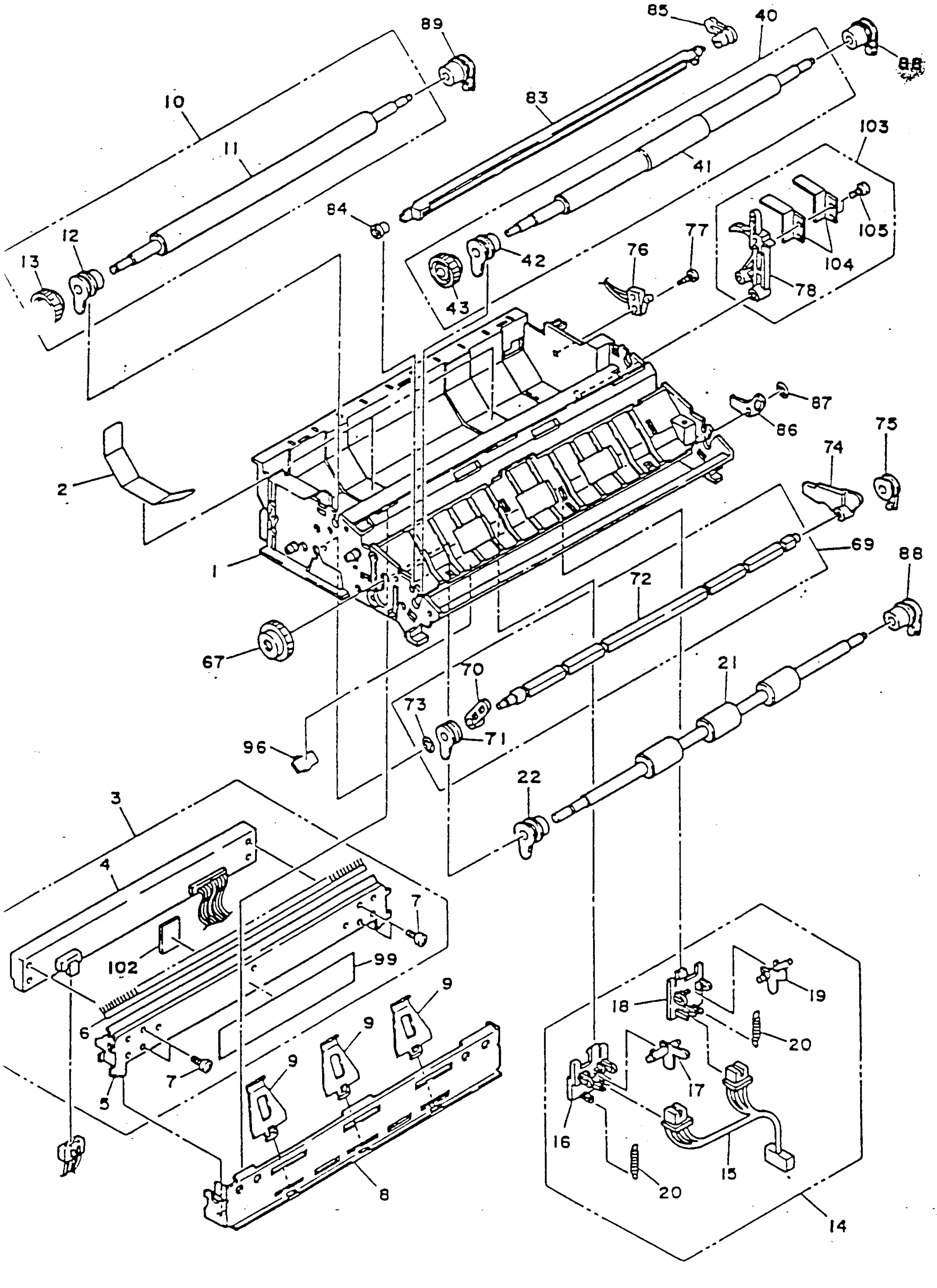

ZEICHNUNG 3 - MAIN FRAME ASSY (2/2) (FIGURE 3 - MAIN FRAME ASSY, 2/2)

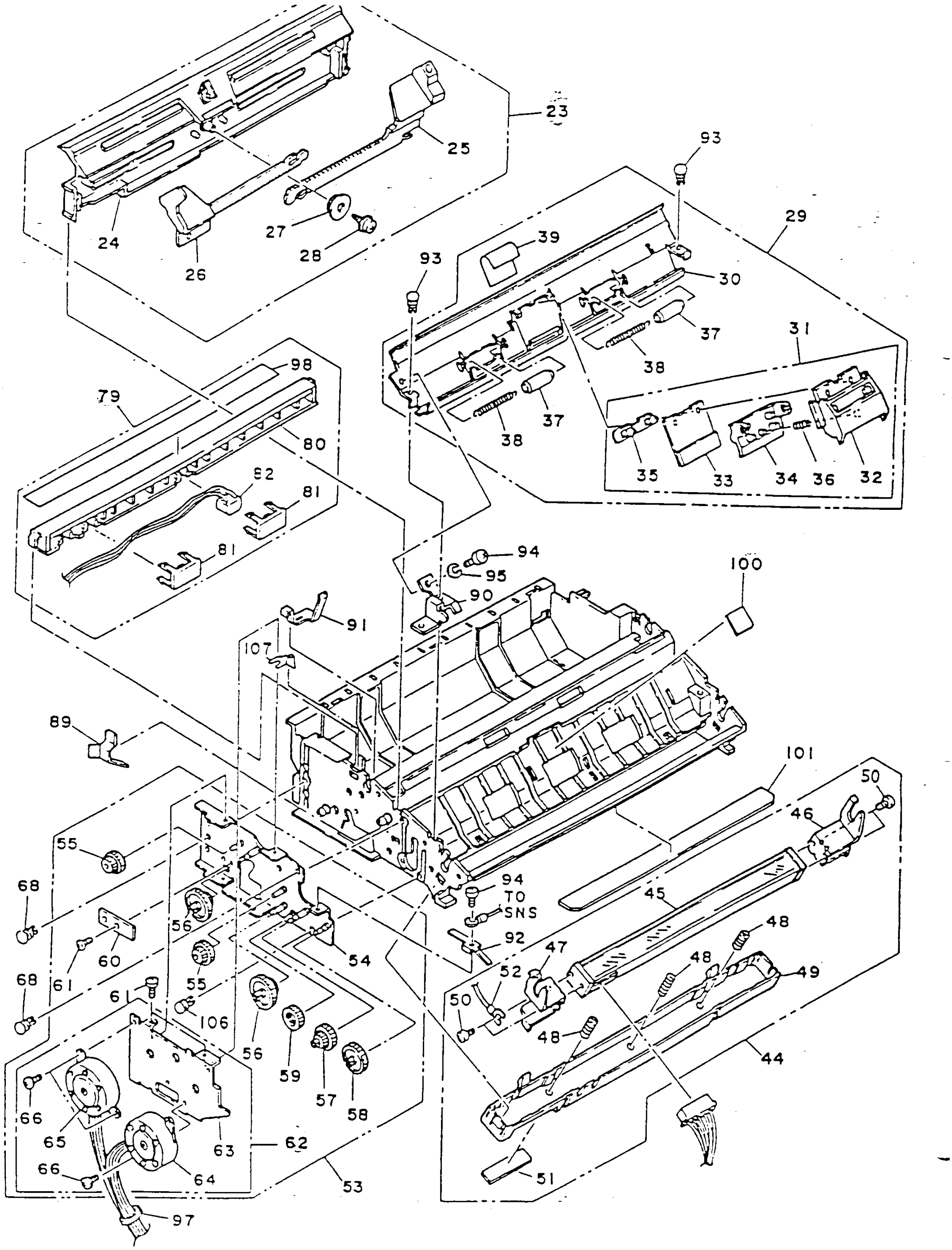

LISTE 3 - SCAN/PRINT BASE ASSY (TABLE 3 - SCAN/PRINT BASE ASSY)

NR. NO.	BEZEICHNUNG PART NAME	BESTELL-NR. PART NO
2	LINER	4PP3526-3142P1
3	THERMAL HEAD ASSY (ENTHÄLT NR. 4-7,99,102)	2PA3526-3147G1
4	THERMAL HEAD	4YB3526-1018P1
9	THERMAL HEAD PRESSURE SPRING	4PP3526-3059P2
10	PRINT ROLLER ASSY (ENTHÄLT NR. 11-13)	3PA3526-3081G1
12	METAL BUSHING	3PP3526-3076P1
13	ROLLER GEAR (Z18)	3PP3526-3080P1
14	PHOTO SENSOR ASSY (ENTHÄLT NR. 15-20)	3PA3526-3083G1
18	PC2 BRACKET	3PP3526-3088P1
21	ADF ROLLER	3PP3526-3075P1
22	METAL BUSHING	3PP3526-3076P1
23	DOCUMENT GUIDE ASSY	2PA3526-3150G1
29	DOCUMENT UPPER GUIDE ASSY (ENTHÄLT NR. 30,31, 37-39)	2PA3526-3061G1
31	SEPARATION RUBBER ASSY (ENTHÄLT NR. 32-36)	2PA3526-3050G1
33	SEPARATION RUBBER	4YB3526-1077G1
37	PINCH ROLLER	4PP3526-3095P1
38	ROLLER PINCH SPRING	4PP3526-3101P1
40	SCAN ROLLER ASSY (ENTHÄLT NR. 41-43)	3PA3526-3078G1
42	METAL BUSHING	3PP3526-3076P1
44	SCAN UNIT ASSY (ENTHÄLT NR. 45-52)	2PA3526-3062G1
45	SCAN UNIT	4YB3526-1016G1
49	SCAN UNIT HOLDER	1PP3526-3066P1
55	GEAR (A)	3PP3526-3091P1
56	GEAR (B)	3PP3526-3092P1
57	GEAR (C)	3PP3526-3093P1
58	GEAR (D)	3PP3526-3094P1
59	ROLLER GEAR (Z18)	3PP3526-3080P1
61	SCREW	+BTD3-6-IOF
62	MOTOR FRAME ASSY (ENTHÄLT NR. 63-66)	3PA3526-3146G1
66	SCREW	+BTD3-6-IOF

NR. NO.	BEZEICHNUNG PART NAME	BESTELL-NR. PART NO	BEMERKUNG REMARK
67	CRUTCH GEAR	3PP3526-3077G1	
70	THERMAL HEAD RELEASE, L	3PP3526-3070P1	
71	METAL BUSHING	4PP3526-3071P1	
73	E-RING	RE5-SUS	
74	THERMAL HEAD RELEASE, R	3PP3526-3069P1	
75	METAL BUSHING	4PP3526-3071P1	
76	MICRO SWITCH	4YB3526-1025G1	
79	INNER GUIDE ASSY (ENTHÄLT NR. 80-82, 98)	2PA3526-3042G1	
85	SCAN UNIT RELEASE (A)	3PP3526-3135P1	
86	SCAN UNIT RELEASE (B)	4PP3526-3136P1	
88	METAL BUSHING	3PP3526-3076P1	
89	EARTH PLATE (A)	4PP3526-3038P1	
94	SCREW	+BTD3-6-IOF	
97	WIRE CLAMPER	123A1002P0001	
99	RUBBER	4PP3526-3232P1	
100	ADF MYLAR	4PP3526-3241P1	
102	THERMAL HEAD SPACER	4PP3526-3238P1	
103	RELEASE THERMAL HEAD LEVER (ENTHÄLT NR. 78, 104, 105)	4PA3526-3237G1	
105	SCREW	+TTP3-6-HHC	

ZEICHNUNG 4 - POWER SUPPLY ASSY (FIGURE 4 - POWER SUPPLY ASSY)

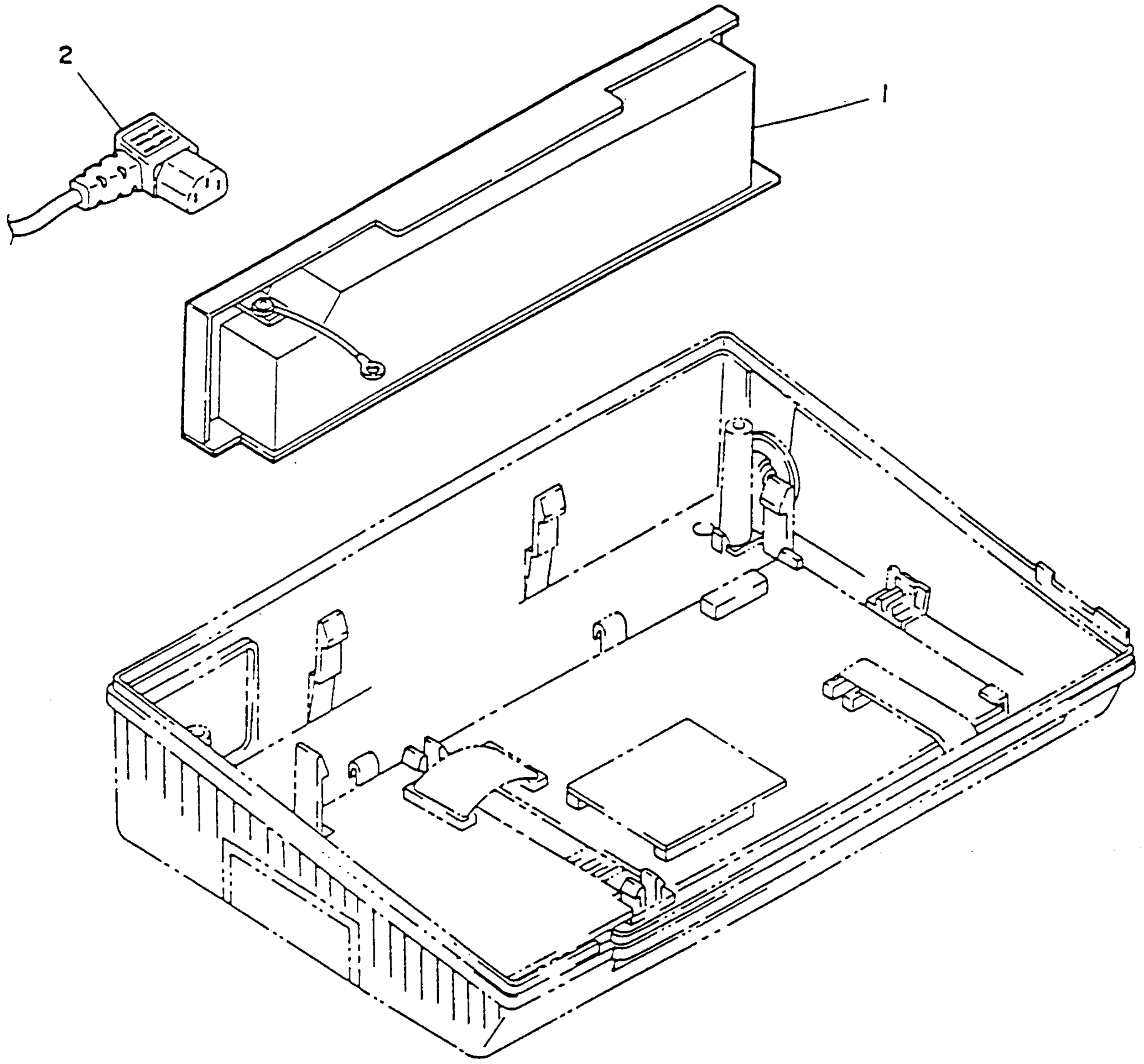

LISTE 4 - POWER SUPPLY ASSY (TABLE 4 - POWER SUPPLY ASSY)

NR. NO.	BEZEICHNUNG PART NAME	BESTELL-NR. PART NO
1	POWER SUPPLY ASSY	4YB3526-1065P1